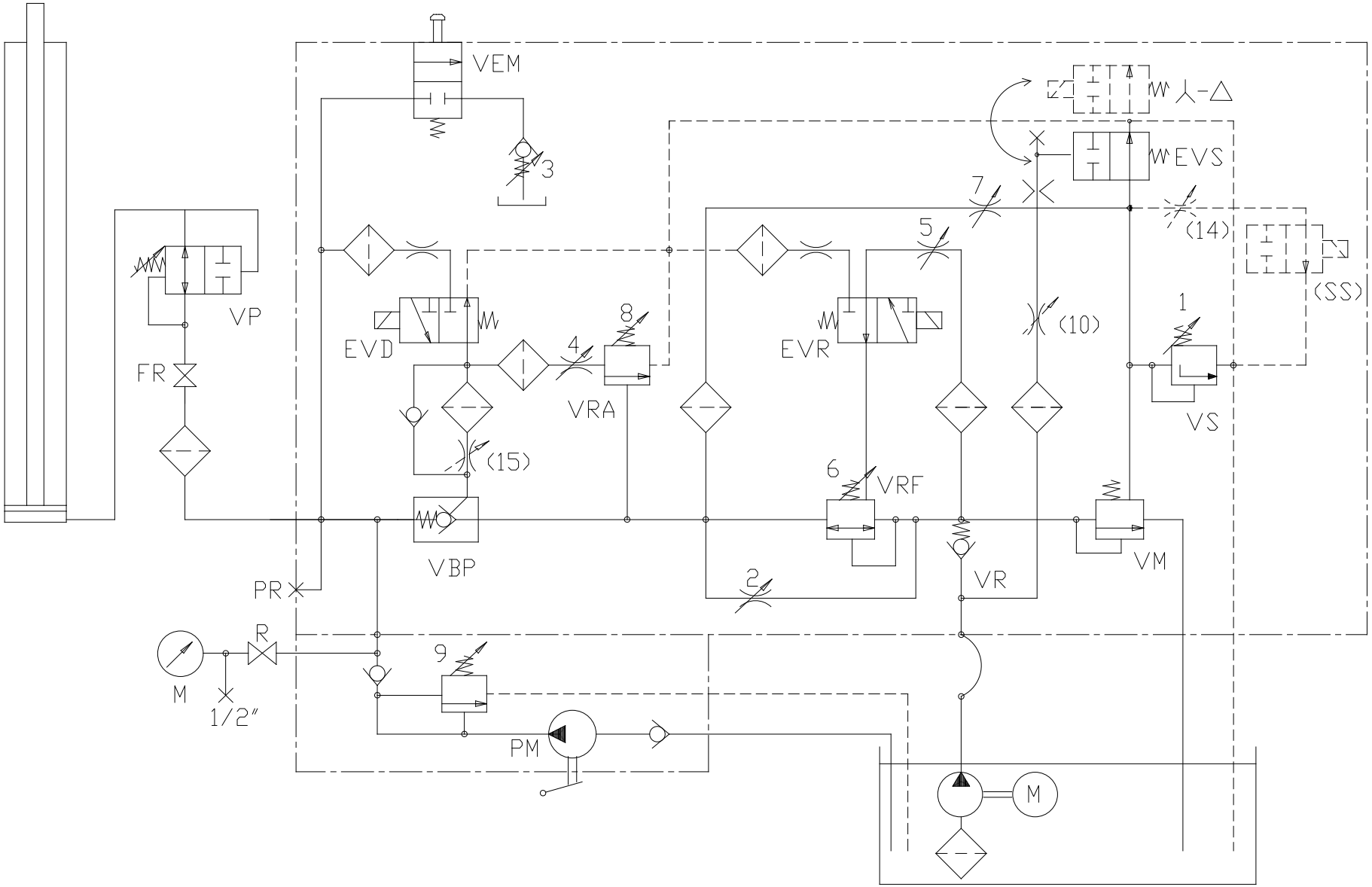

OMARLIFT

COMPONENTI OLEODINAMICI PER ASCENSORI
HYDRAULIC ELEVATOR UNITS

SCHEMA IDRAULICO VALVOLA NL OMARLIFT - rev.06 13/07/2022
HYDRAULIC SCHEME OMARLIFT NL VALVE

rev.06
*Aggiunto logo Omarlift